Loading Media
紙捲安裝
纸卷安装
Instalación de papel
Chargement de papier
Laden des labelmaterials
Instalação de etiquetas
Caricamento carta
Etiket takma
Pasang Bahan/Media

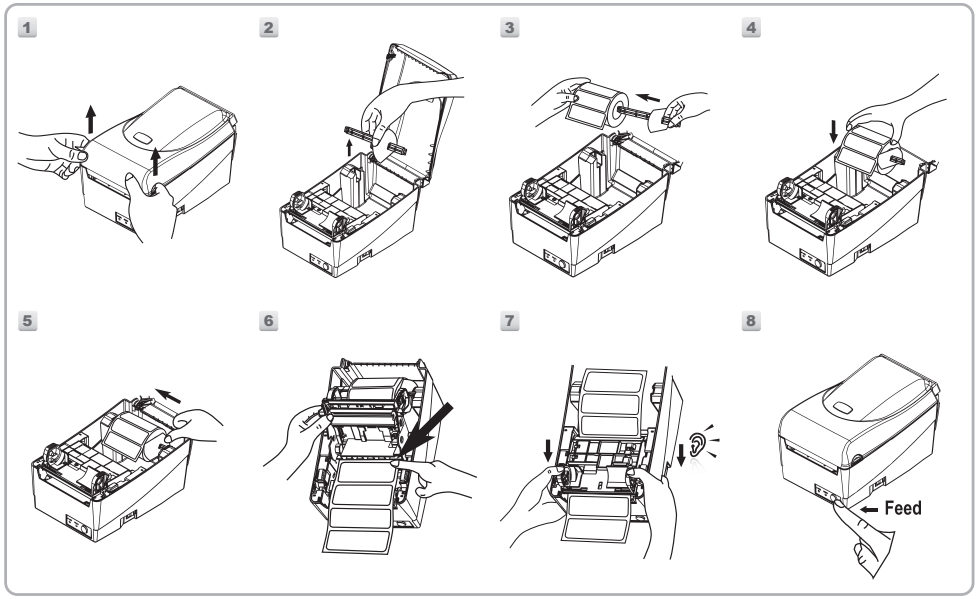

The user is cautioned that any changes or modifications not recommended by Argox Information Co. Ltd. could result in the loss of the user's authority to operate the equipment. To ensure compliance, the users must use accessories and peripherals approved by Argox Information Co. Ltd.

Supplemental Information: This device complies with the requirement of FCC Part 15 Rules. Operation is subject to the following two Conditions:
(1) This device may not cause harmful interference and
(2) this device must accept any interference received, including interference that may cause undesired operation.

INDUSTRY CANADA NOTICE:
This device complies with Industry Canada ICES-003 class A requirements.
Cet equipement est conforme a ICES-003 classe A de la norm Industrielle Canadien.

LTLE
95RJ
E176125

IEC 60950-1: 2005+A1: 2009
EN 60950-1: 2006+A11: 2009+A1: 2010+A12: 2011

EMC: EN 55032: 2015+AC: 2016,Class A
EN 55024: 2010 + A1: 2015

Argox Information Co., Ltd certifies that the following products and/or components are compliant with the current requirements of the European Union Restriction on the use of Hazardous Substances (RoHS) Directive, 2011/65/EU.

警告使用者:
這是甲類的資訊產品，在居住的環境中使用時，可能會造成射頻干擾，在這種情況下，使用者會被要求採取某些適當的對策。

CAUTION: RISK OF EXPLOSION IF BATTERY IS REPLACED BY AN INCORRECT TYPE. DISPOSE OF USED BATTERIES ACCORDING TO THE INSTRUCTIONS.

ATTENTION. RISQUE D'EXPLOSION SI LA BATTERIE EST REMPLACEE PAR UN MODELE INCORRECT. JETEZ LES BATTERIES USAGEES SELON LES INSTRUCTIONS S'Y REFERANT.

設備名稱：條碼印表機 型號（型式）：OS-214D （系列型號詳次頁）
Equipment name Type designation (Type)

單元Unit	限用物質及其化學符號 Restricted substances and its chemical symbols					
	鉛Lead (Pb)	汞Mercury (Hg)	鎘 Cadmium (Cd)	六價鉻 Hexavalent chromium (Cr^{+6})	多溴聯苯 Polybrominated biphenyls (PBB)	多溴二苯醚 Polybrominated diphenyl ethers (PBDE)
印刷電路板組件	—	○	○	○	○	○
機殼	—	○	○	○	○	○
線材	○	○	○	○	○	○
電源器	—	○	○	○	○	○
印字機構組	—	○	○	○	○	○

備考1.〝超出0.1 wt %〞及〝超出0.01 wt %〞係指限用物質之百分比含量超出百分比含量基準值。
Note 1: "Exceeding 0.1 wt %" and "exceeding 0.01 wt %" indicate that the percentage content of the restricted substance exceeds the reference percentage value of presence condition.
備考2.〝○〞係指該項限用物質之百分比含量未超出百分比含量基準值。
Note 2: "○" indicates that the percentage content of the restricted substance does not exceed the percentage of reference value of presence.
備考3.〝—〞係指該項限用物質為排除項目。
Note 3: The "—" indicates that the restricted substance corresponds to the exemption.

Argox Information Co., Ltd.
8F., No. 28, Baogao Rd., Xindian Dist.,
New Taipei City 231029, Taiwan (R.O.C.)
Tel: +886-2-8912-1121 Fax: +886-2-8912-1124
https://www.argox.com
https://www.youtube.com/user/argoxmkt
email:service@argox.com
Copyright © 2023. Argox Information Co.Ltd., All Rights Reserved.

ARGOX
a SATO company

OS-214D
Printers Quick Installation Guide

快速安裝指南
快速安裝指南
Guía Rápida
Rapide Guide
Bedienerhandbuch
Guia de Ajuda Rápida
Guida Rapida
Hızlı Kurulum Kılavuzu
Pedoman Penginstalan Cara Cepat

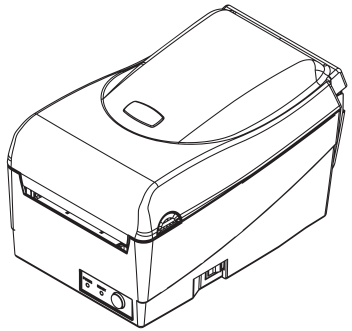

Part No: 49-20401-001
Revision Date: May. 2023

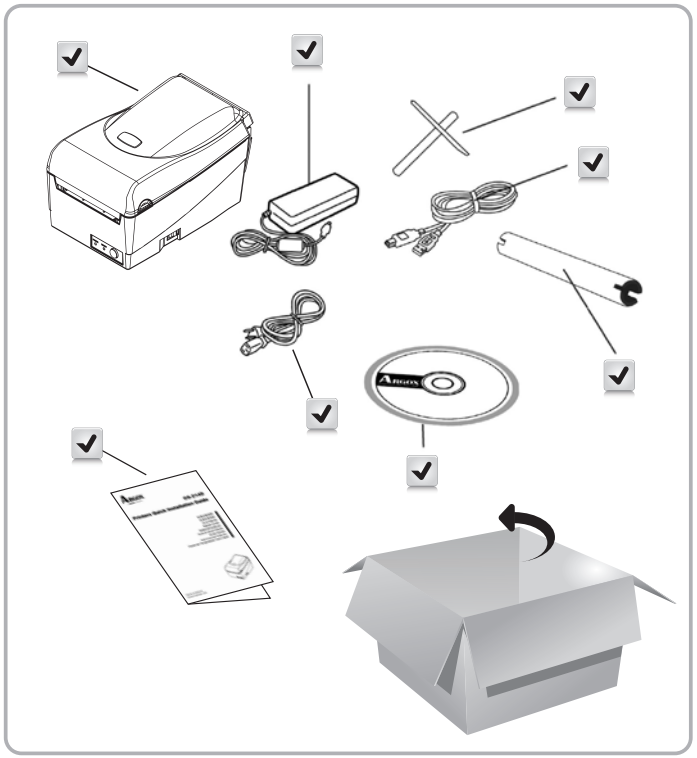

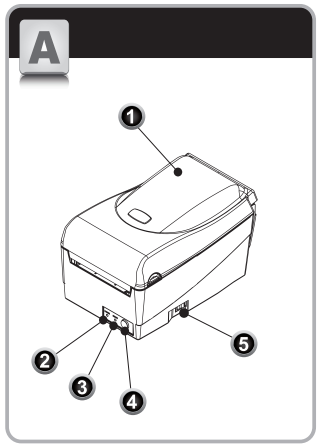

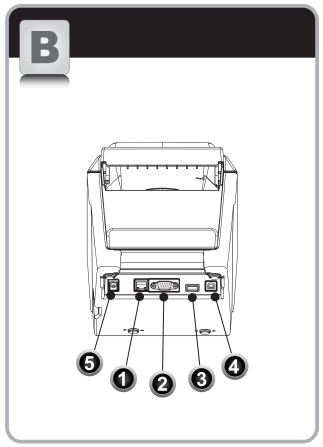

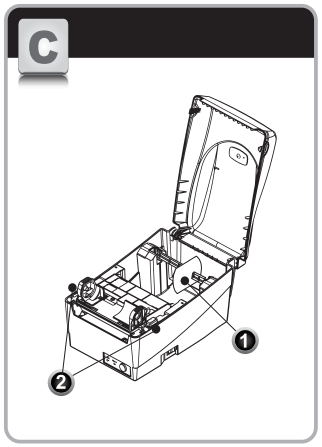

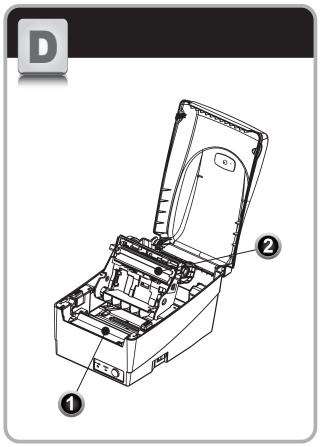

English

-A-
1 Top Cover
2 Power Indicator
3 Ready Indicator
4 Feed Button
5 Power Switch

-B-
1 Ethernet
2 Serial Port (RS232-C)
3 USB Type A
4 USB Type B
5 Power Jack

-C-
1 Media Hanger
2 Release Levers

-D-
1 Platen Roller
2 Thermal Print Head

繁體中文

-A-
1 上蓋
2 電源燈
3 確認燈
4 送紙鍵
5 電源開關

-B-
1 乙太網路埠
2 RS232 串列埠
3 USB Type A
4 USB Type B
5 電源連接器

-C-
1 紙捲供應端
2 閉鎖卡條

-D-
1 滾軸
2 印字頭模組

简体中文

-A-
1 上盖
2 电源灯
3 确认灯
4 送纸按钮
5 电源开关

-B-
1 乙太网络端口
2 RS232 串口
3 USB Type A
4 USB Type B
5 电源连接器

-C-
1 纸卷供应端
2 闭锁卡条

-D-
1 滚轴
2 打印头模组

Español

-A-
1 Cubierta de arriba
2 Indicador de energía
3 Indicador READY
4 Botón FEED (Alimentación)
5 Interruptor de energía

-B-
1 Ethernet
2 Serie RS232
3 USB Tipo A
4 USB Tipo B
5 Conector de alimentación

-C-
1 Soporte de suministro de papel
2 Seguro de liberación

-D-
1 Rodillo arrastre
2 Cabezal de impresión

Français

-A-
1 Couverture
2 Indicateur d'alimentation
3 Prêt Indicateur
4 Bouton d'alimentation
5 Power

-B-
1 Ethernet
2 Port Série RS232
3 USB Tipo A
4 USB Tipo B
5 Connecteur d'alimentation

-C-
1 Support l'approvisionnement en papier
2 Levier de sortie

-D-
1 Roller glisser
2 Tête d'impression

Deutsch

-A-
1 Deckel
2 POWER-LED
3 Zustandsanzeige
4 FEED-Taste
5 Netzschalter

-B-
1 Ethernet
2 RS232 seriell
3 USB Typ A
4 USB Typ B
5 Stromanschluß

-C-
1 Etikettenrollenhalter
2 Knöpfe zum Entrasten der Halterung

-D-
1 Andruckwalze
2 Druckkopf-Modul

Português

-A-
1 Tampa Superior
2 Indicador de Energia
3 Indicador de Funcionamento
4 Tecla de avanço de papel
5 Interruptor Ligar/ Desligar

-B-
1 Ethernet
2 Serial RS232
3 USB Tipo A
4 USB Tipo B
5 Conector de Energia

-C-
1 Suporte do rolo de papel
2 Manetes para libertar papel

-D-
1 Rolo de tracção
2 Módulo da cabeça de impressora

Italia

-A-
1 Coperchio superiore
2 LED Accensione
3 LED Pronto
4 Pulsante avanzamento
5 Interruttore accensione

-B-
1 Ethernet
2 Seriale RS232
3 USB Tipo A
4 USB Tipo B
5 Alimentazione DC

-C-
1 Supporto rotolo
2 Leve di rilascio

-D-
1 Rullo stampa
2 Modulo Testina di stampa

Türkçe

-A-
1 Üst Kapak
2 Güç LED'i
3 Hazır LED'i
4 İlerletme Düğmesi
5 Açma/Kapatma Düğmesi

-B-
1 Ethernet Girişi
2 Seri Port (RS-232C)
3 USB Tip A
4 USB Tip B
5 Adaptör Girişi

-C-
1 Etiket çubuğu
2 Serbest bırakma Tırnakları

-D-
1 Kauçuk Silindir
2 Termal Yazıcı Kafası

Bahasa Indonesia

-A-
1 Penutup Atas
2 Power Indikasi
3 Ready/Siap Indikasi
4 Tombol Maju
5 Saklar Power

-B-
1 Ethernet
2 Serial
3 USB Type A
4 USB Type B
5 Colokan Power

-C-
1 Gantungan Media
2 Tuas Pelepas

-D-
1 Platen Penggulung
2 Print Head Thermal